24” -36” HYDRAULIC LINE STOP MACHINE

140” Travel-24” 150# to 36” 150# and 24” 600# to 36” 600#

PRESSURE/TEMPERATURE LIMITS

Maximum Operating Pressure @ 100°F

140” Travel ----------1480psi

Maximum Operating Temperature

140” Travel ---------- -20 to 180°F @ 1376psi

Control Bar Diameter ---------4.5”

Control Bar Bolt Size -------¾” x 5-1/2” Shoulder Bolt

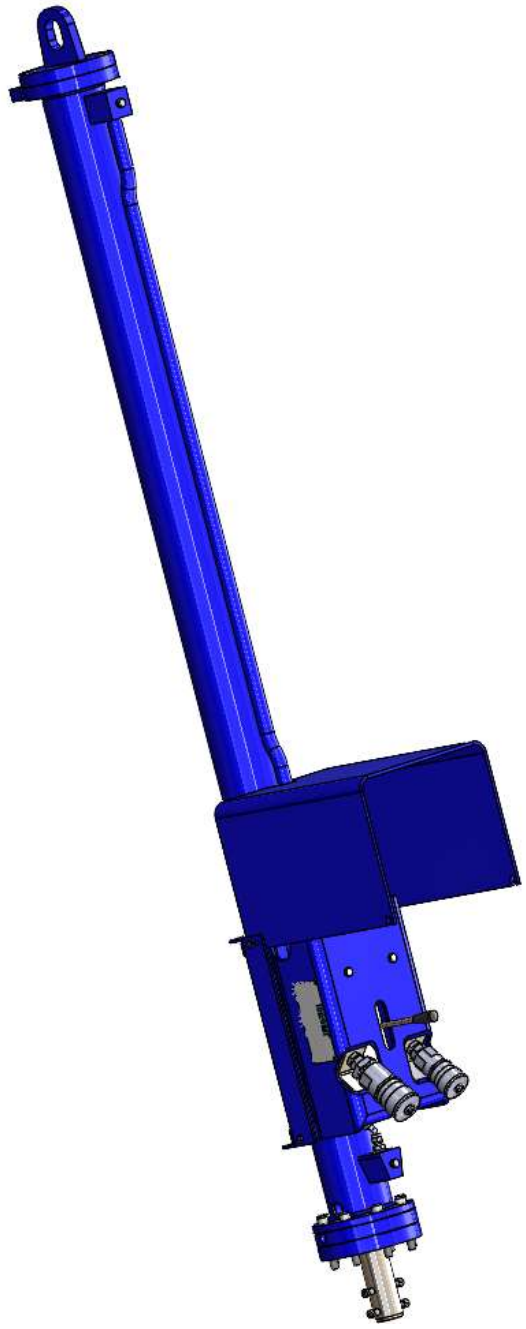

Function	Rating/Operating Dimensions
Maximum Operating Pressure	1480 PSI @ 100°F
Maximum Operating Temperature	-20°F to 180°F @ 1376 PSI
Maximum Test Pressure	1480 PSI with 600# Flange
Maximum Bar Travel	140”
Normal Line Stop Range	150# & 600#
Size Range	24” – 36” (22” in some situations)
Attaching Flange	
O-ring	Smooth Face
RTJ	6” 600#
Attaching Flange Bolt Size	
O-ring	⅝”- 11 x 6”
RTJ	
Flat Faced RTJ Flange	1”-8 x 3-½”
Raced Face RTJ Flange	1”-8 x 4”
RTJ Gasket Size	R 45
O-Ring Size	#435 (6.275” OD x 5.725 0.275” Cross Section)
Control Bar Diameter	4”
Control Bar Bolt Size	¾” x 6” Shoulder Bolt
Control Bar Bolt Nut Size	⅝”-11
Bar Lock Wrench Size	½” Hex Key
Weight With Out Housing	2400 LBS

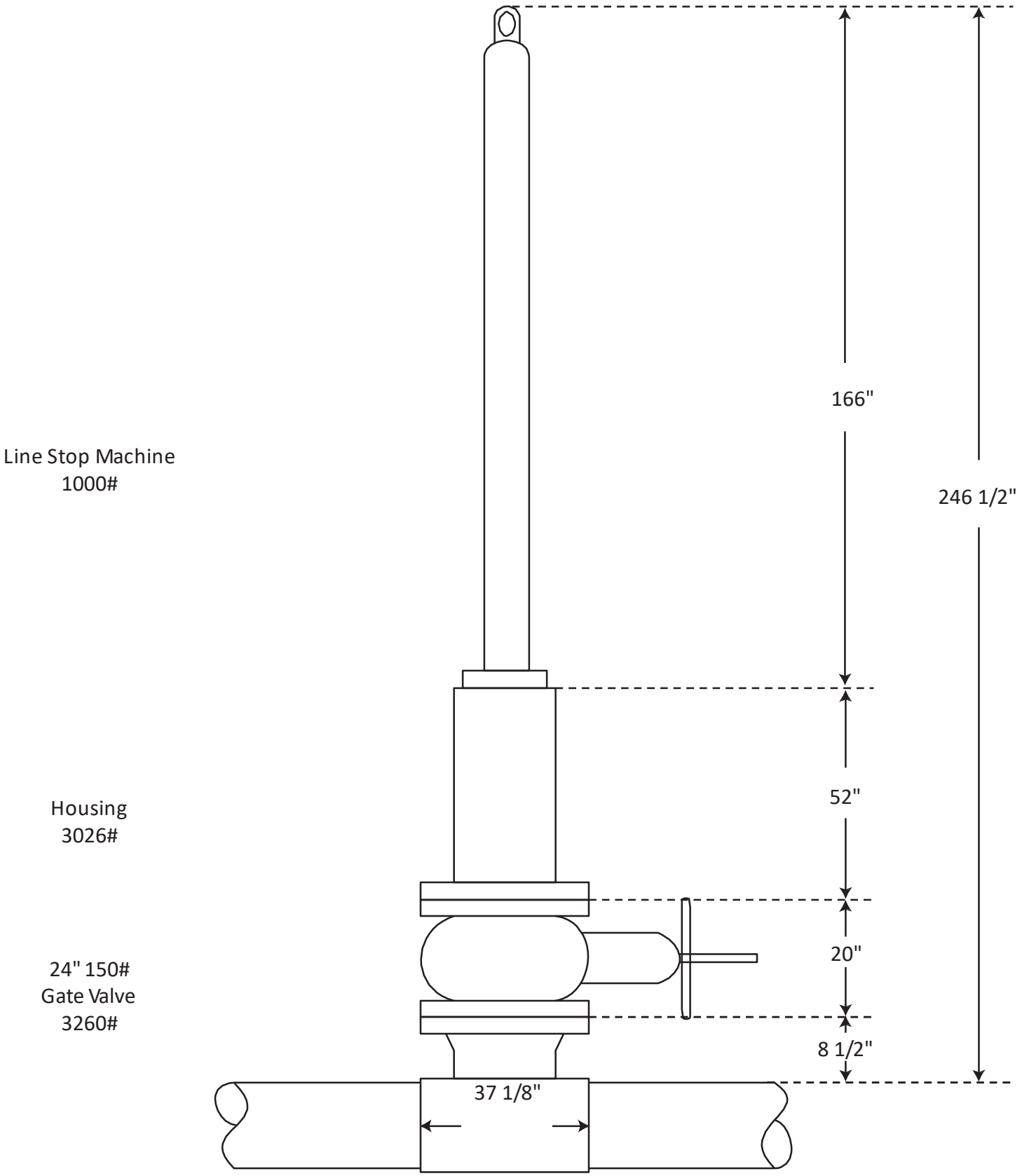

24 - 36 Hydraulic Line Stop Machine 24" 150# Line Stop

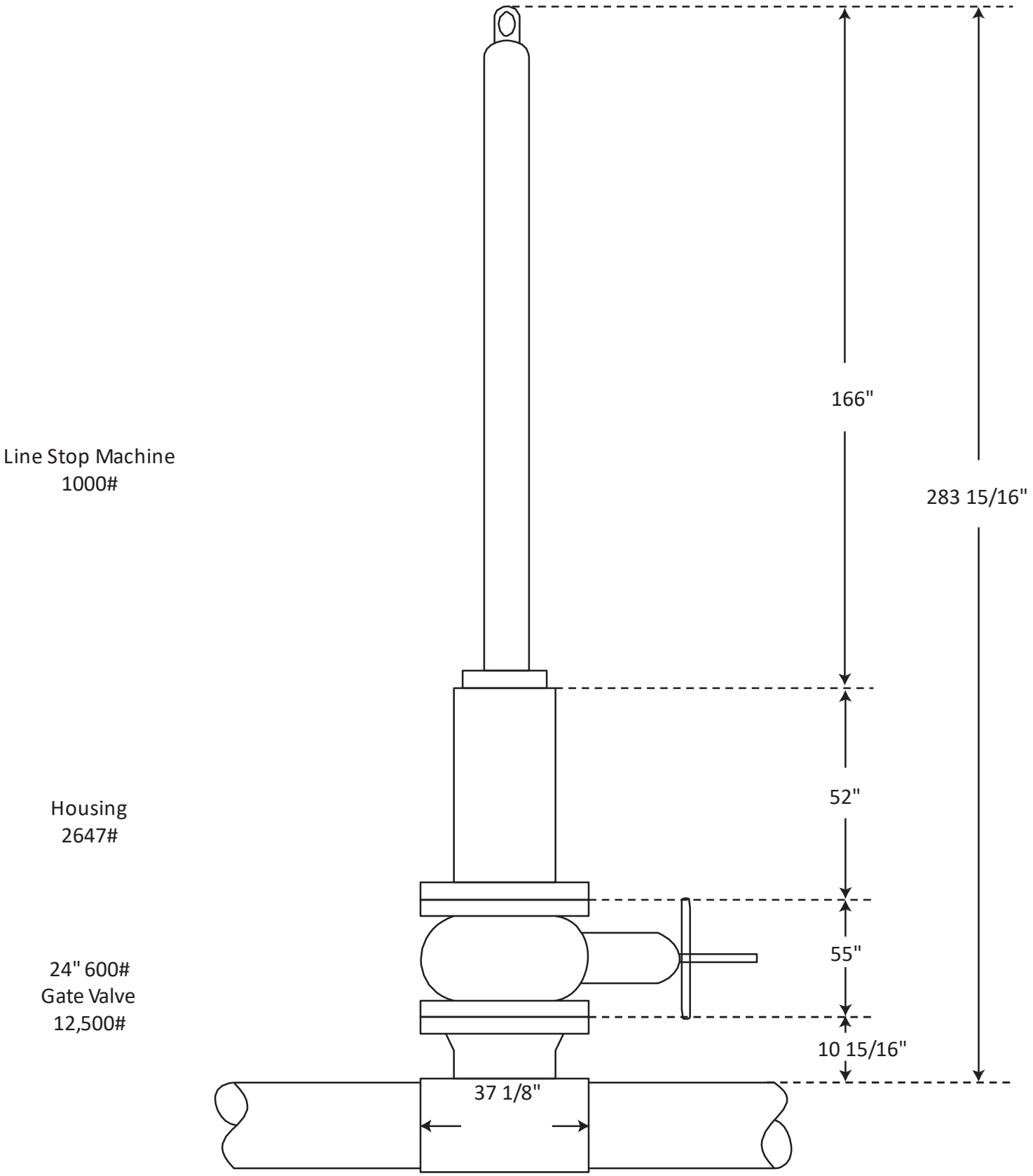

24 - 36 Hydraulic Line Stop Machine 24" 600# Line Stop

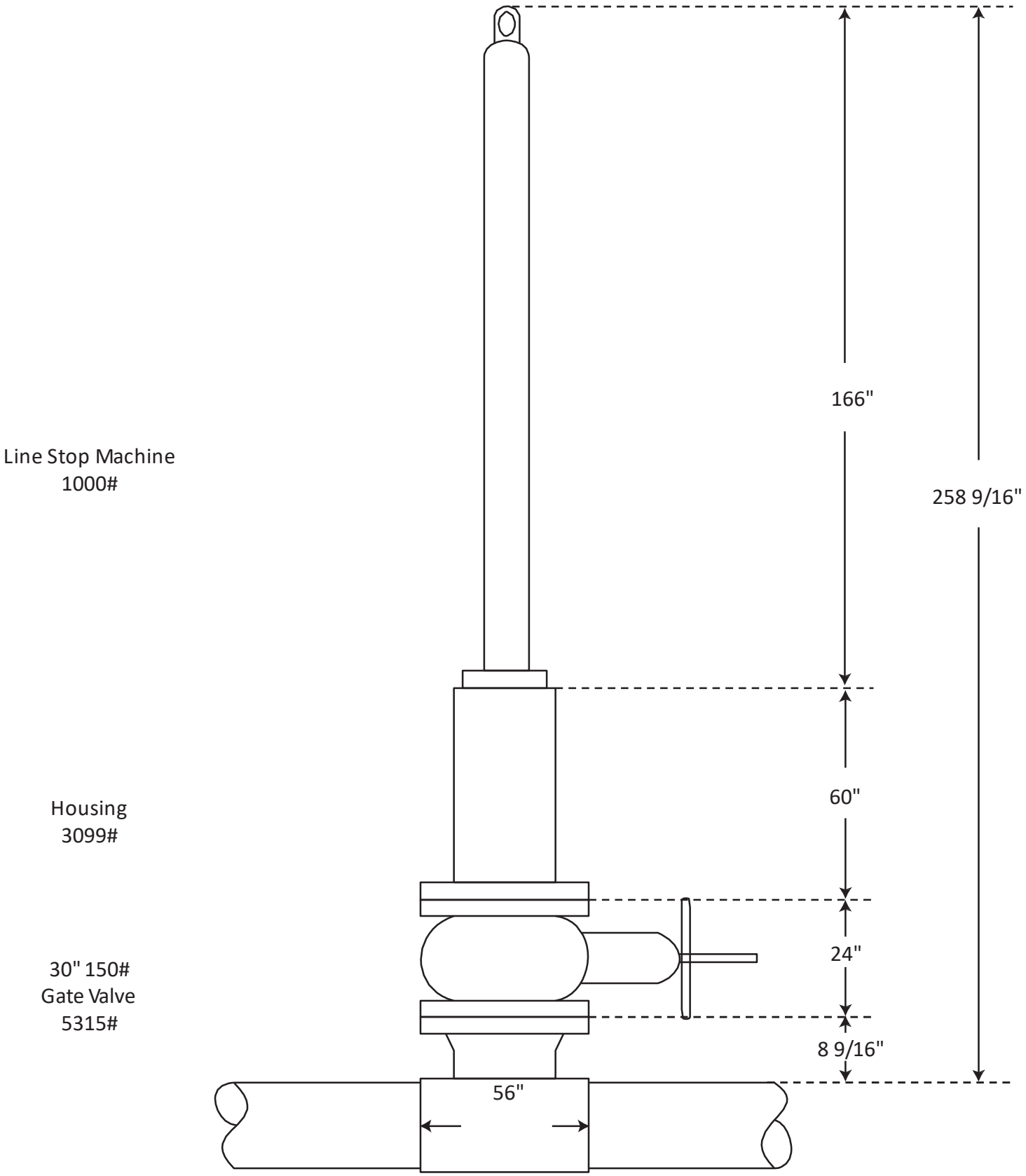

24 - 36 Hydraulic Line Stop Machine 30" 150# Line Stop

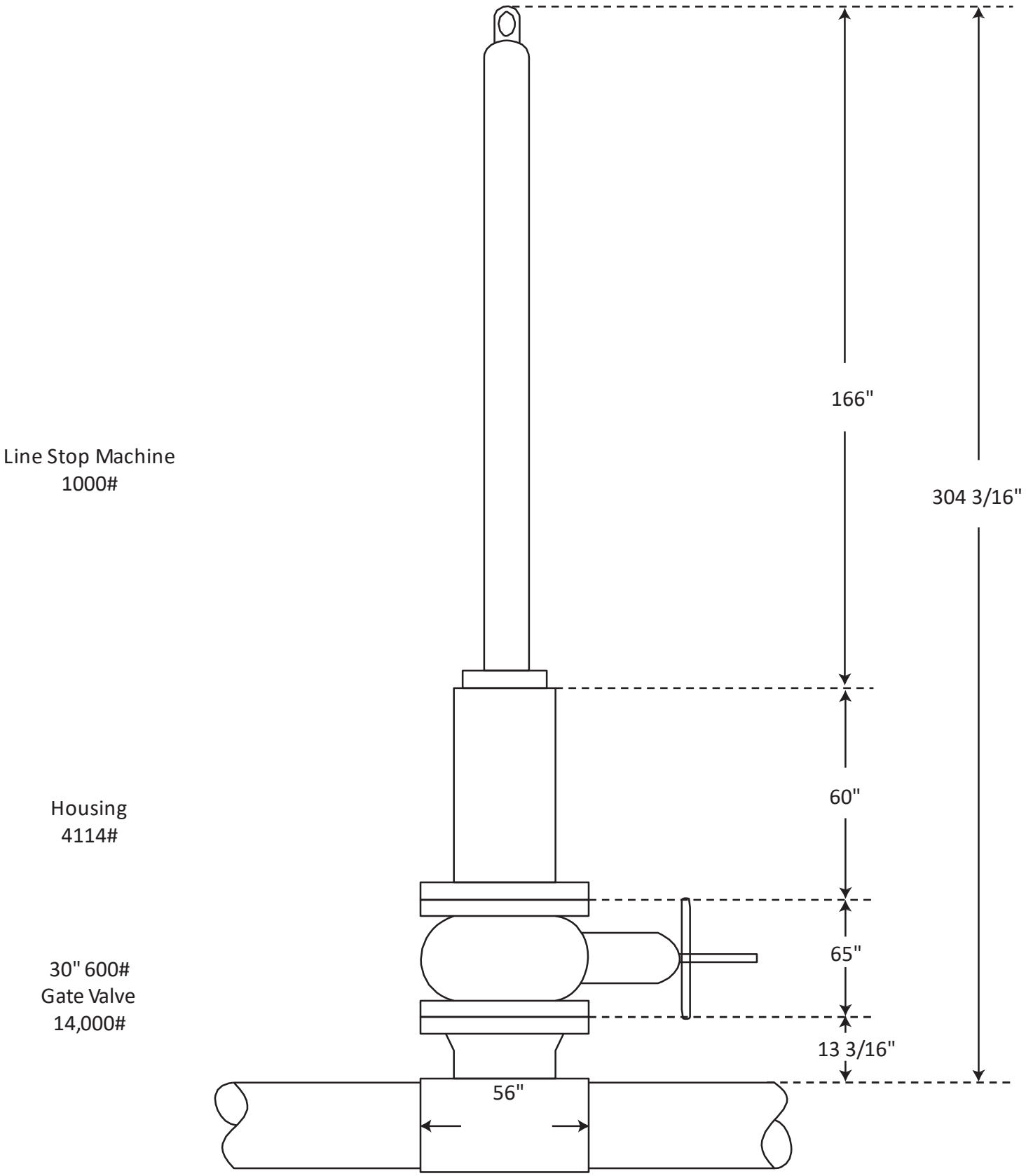

24 - 36 Hydraulic Line Stop Machine 30" 600# Line Stop

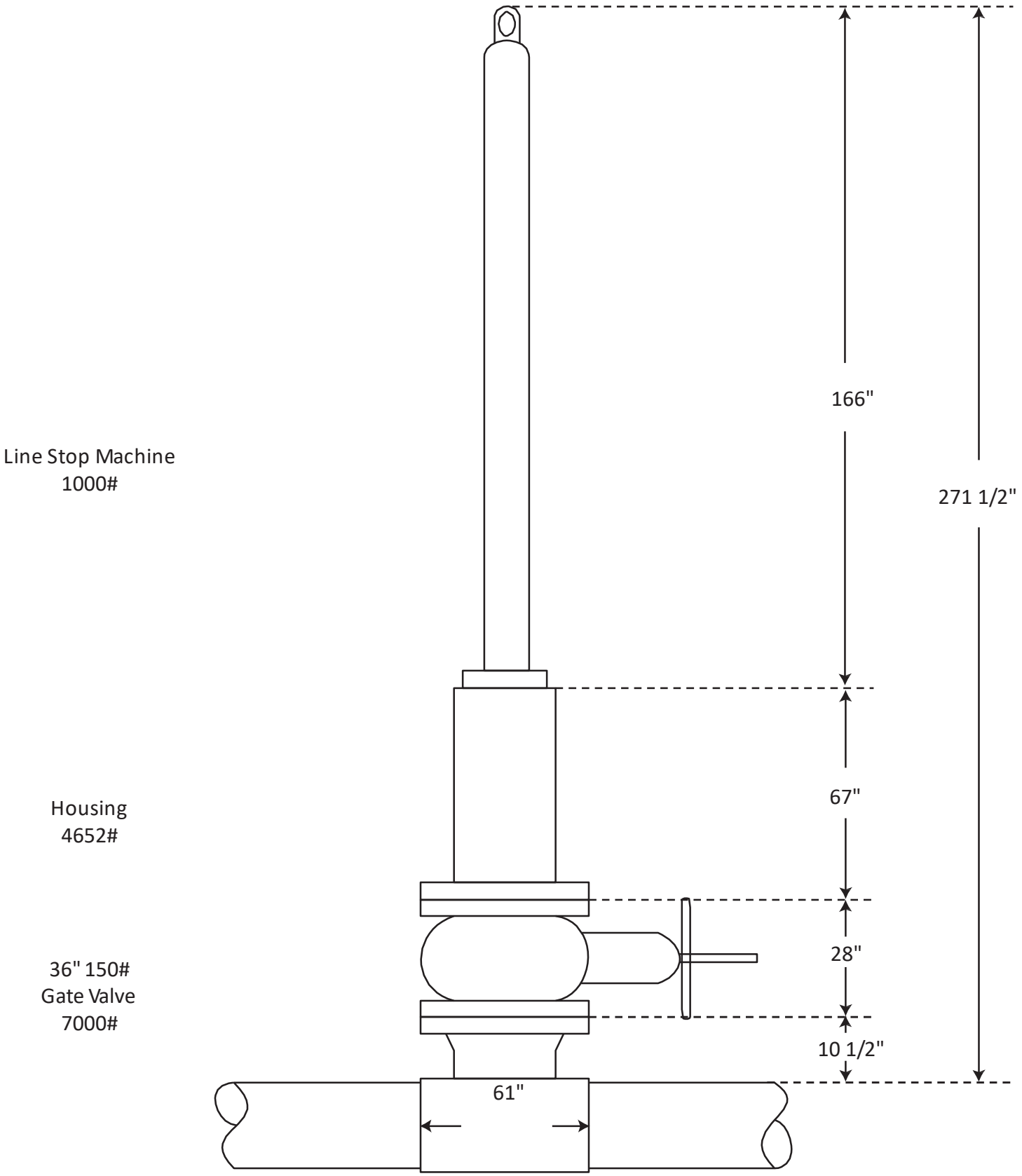

24 - 36 Hydraulic Line Stop Machine 36" 150# Line Stop

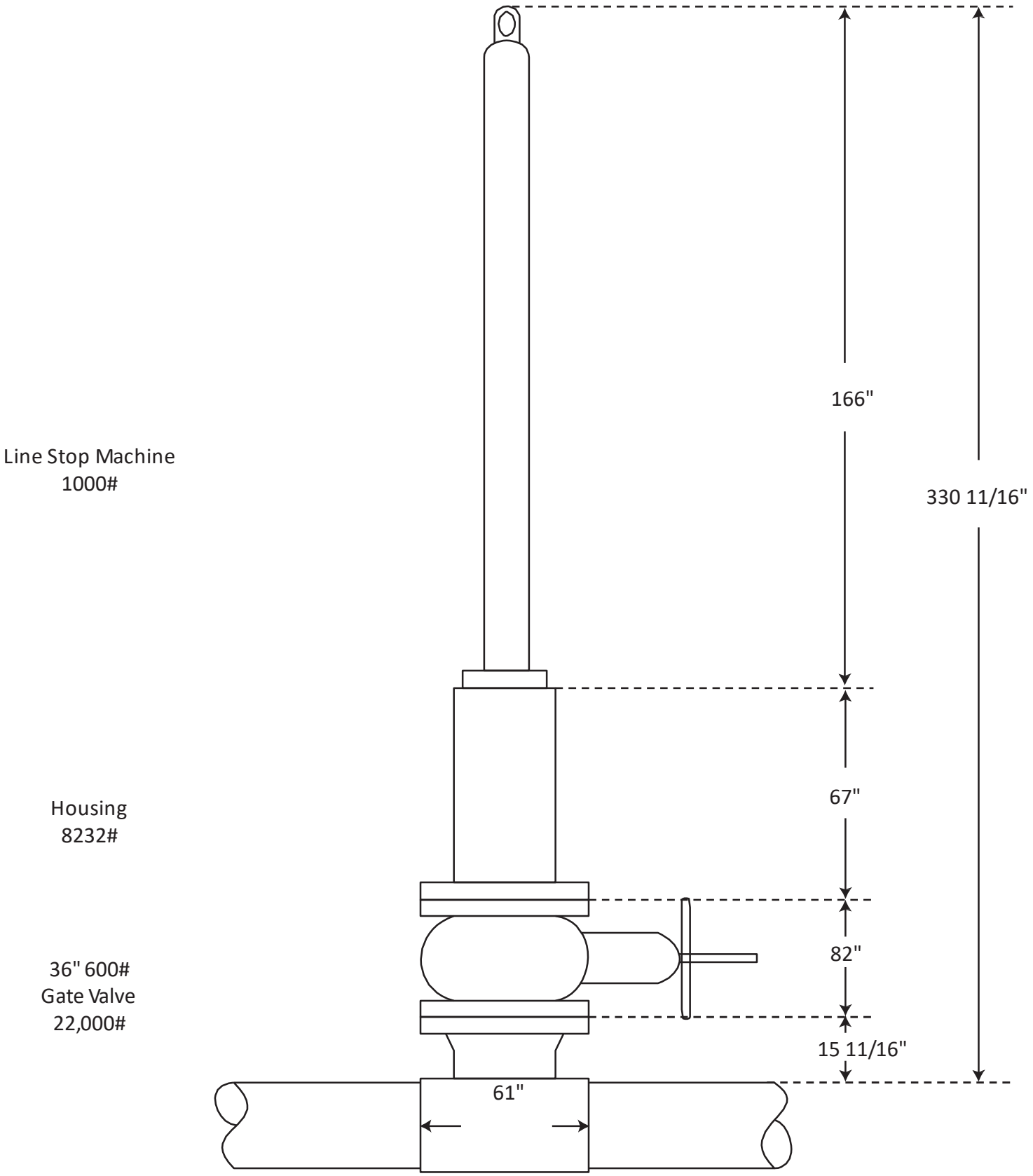

24 - 36 Hydraulic Line Stop Machine 36" 600# Line Stop